"SELF DRILLING FASTENERS"

Roofix® FASTENERS



Your Partner for Quality fastening Solutions in

ROOFING & CLADDING.






Member of :

NATIONAL ROOFING CONTRACTORS ASSOCIATION

Realm
INTERMEDIATES (P) LTD.

Suite No.19, 1st Floor, Plot No. 3A, Udyog Nagar,
Goregaon (W), Mumbai - 400 062, Maharashtra, India.
Tel.: 91-22-2876 6563 • Fax : 91-22-2876 3244
E-mail : realm@vsnl.com • Web : www.realmindia.com

Customer Care No. 91-22-2876 8881 / +91 98 2030 4030

Subject to change without notice. This edition supersedes all previous editions. We reserve the right to change technical details without prior notice. No responsibility taken for printing errors.

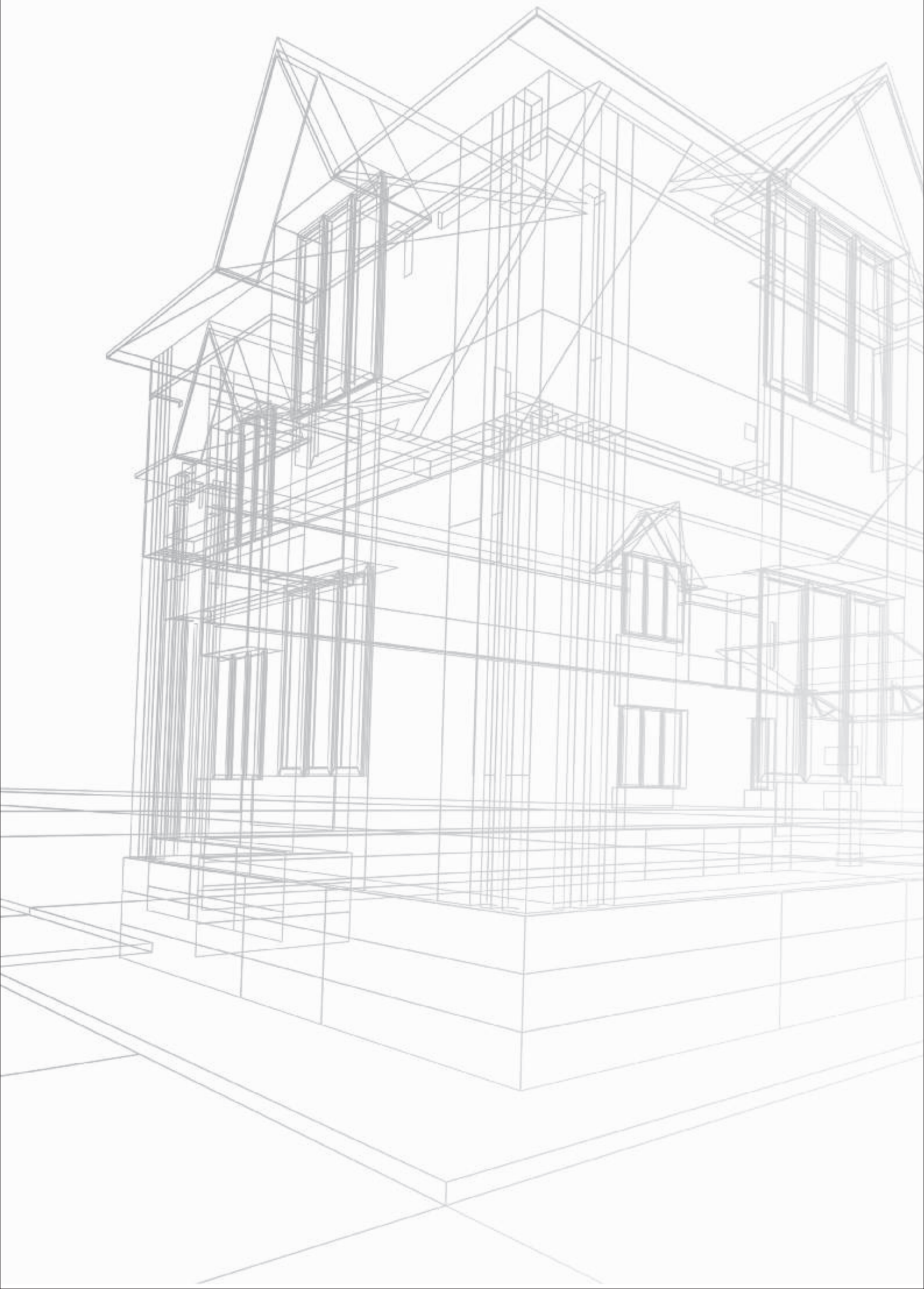

CONTENTS

Description	Page
Company Profile	2
Definition & Sizes	3-5
Advantage! Roofix	6-7
Team Work	8
Warranty	9
Corrosion Problem	10
Coating Details (Rust Shield Coating)	11
SolutionsFfixing Methodology	12
Fasteners	13-21
Sockets & Drive Bits	22
Washers & Accessories	23
EPDM Washers Details	24-25
Decision Analysis	26
Technical Specification	27
Problems & Solutions	28

We sincerely acknowledge the suggestions made by esteem consultants and
our key customer for compiling this catalog for Roofix Roofing Fasteners.
We are committed to offer our best. We would appreciate any suggestion for further improvements.



At REALM, we are committed to being a partner for the Roofing Industry. We work closely with all section of the trade to understand your needs and we seek out the finest fasteners from across the world making them available right at our client's door step to assist and increase your performance.

REALM Intermediates Pvt. Ltd. was established in 1998 head office is based out of Mumbai. The company designs, develops and markets contemporary standard fasteners & Quality Products for the construction industry. It is also a trusted representative for both national and international manufacturers.

Commitment to Construction Industry

We realized long back that the fasteners used in construction can often determine the success or failure of a project. This insight leads us to dedicate our collective energies towards providing quality range of fasteners and value added services deigned to not only speed construction, improve structural reliability but also ensure performance under demanding weather conditions.

REALM introduced **ROOFIX** brand of **Self Drilling Screws** to the metal roofing market. It's a perfect combination of renowned international design and India-specific customization. These screws are imported only from ISO certified companies across countries like Australia and in South East Asia. Our application specialists provide ready technical support in helping you pick up the right product. We have a warehouse facility based out of Navi Mumbai that regularly delivers goods all across India.

Our Range of Products for Fixing Metal Roofs, Cladding & Decking includes Screws Solutions which can dramatically speed up the installation, improve building integrity and ensure performance under demanding Conditions.

REALM's role is not only to supply you products, but to support you with innovative solutions that increase your productivity and profitability, reduce risk and help you build your reputation as a contractor of Choice.

WE attempted to make this catalog as complete and accurate as possible, but changes are inevitable. More part numbers and product lines will be added on regular basis.

Visit our website
for the most
up-to-date literature.



What is ROOFIX™

ROOFIX™ stands for "FIXing of ROOFs"

Drill holes and tap threads on their own!

ROOFIX™ Self Drilling Screw provides high pullout strength, shear strength, maximum thread engagement and positive fastening in structural steel and timber constructions.

Self Drilling Screws ensure drilling, tapping and fastening jobs are simplified into one.

Quicker Turnaround Time

Elimination of alignment tasks and pre-drilling holes has greatly reduced on-site labour time. Thus roofing, cladding and assembly tasks can be completed in just half the time taken by other methods.

Easy Operations

Semiskilled or unskilled labourers can easily work with this kind of fastener as tasks such as selection of drill size and various tools get eliminated over here.

Highly Economical

As fastening is reduced to one operation, alignment problems are eliminated making it a value for money proposition.

ROOFIX™ is manufactured in Taiwan.

The Fastener is Factory Finished, involved in all the stages of manufacturing :

- HEADING
- FORGING
- THREAD ROLLING
- HEAT TREATMENT
- COATING
- EPDM WASHER FITTING
- PACKAGING & DISTRIBUTION

the Quality Product is marketed all India and the neighbouring countries.



Distinctive the head mark consists of an **Engraved RX** logo.

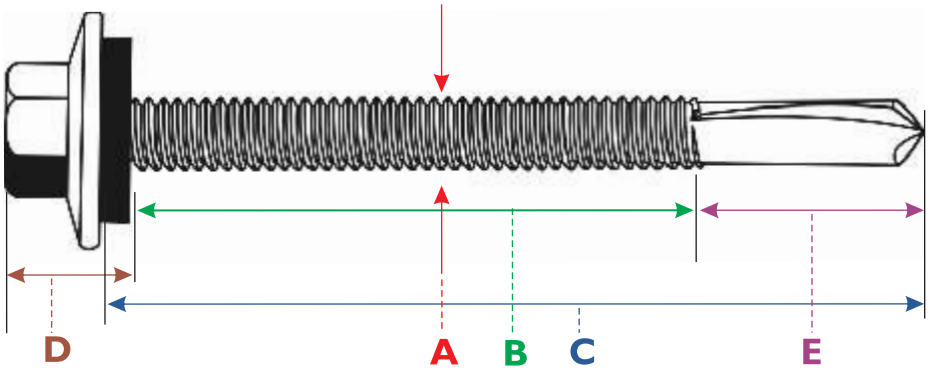

12G -14TPI x 60mm Is better explained as

12 Gauge • 14 Threads per Inch • 60 mm in Length.

A THICKNESS OF SCREW

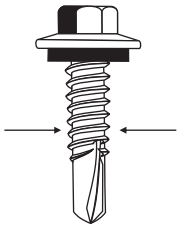

Gauge : The gauge of a screw is determined by the basic size of the thread outside diameter.

Standard Gauges :

10 gauge	=	4.8mm
12 gauge	=	5.5mm
14 gauge	=	6.3mm

B THREAD SELECTION

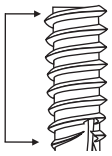

TPI (Threads per Inch)

The TPI is the number of thread crests that can be counted along a lineal measurement of 1inch (25.4mm).

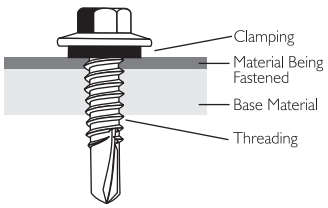

Thread Length

Always choose a fastener with sufficient threads to fully engage in the base metal. For attachments to 1/4" (6mm) base steel, a self-drilling screw should have at least 1/4" (6mm) of threads. It is helpful, but not critical, that the threads also engage in the material being fastened. The head of the fastener provides the bearing force for the material being fastened, while the threads provide the clamping force in the base material.

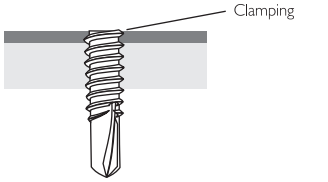

Thread Pitch

The thickness of material being fastened and diameter of the screw determine the type of thread pitch to be used. In general, the **thinner** the fastened materials, the **fewer** the number of threads. The **thicker** the material, the **greater** the number of threads. This principle is due to two primary methods of thread engagement/holding power : **Clamping** and **Threading**. In light gauge metal, the materials are actually being clamped together by upper and lower threads.

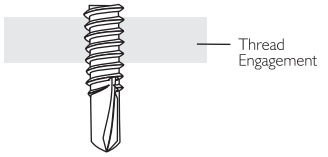

Thinner base material requires a coarser thread pitch to assure proper clamping. The thicker the material, the finer the threads must be. In very thick metal (3/8" to 1/2" thick), a fine thread is advisable. This will allow the thread to tap into the base material with less installation torque than a coarse thread.

C LENGTH SELECTION

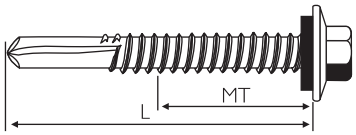

Length of the screw (L)

Depending on the screwhead, there are two different ways to measure the overall length of a screw.

- For Hex Washer Head screws, the overall length is measured from the bottom of the collar under the head to the point of the screw.
- For Wafer Head screws, the overall length is measured from the top of the head to the point of the screw.

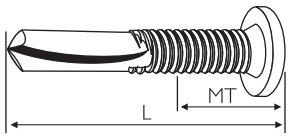

Maximum Total Thickness (MT)

The maximum total thickness (MT) for all screws is the length of the threads reduced by the **first three threads** (protruding past the back-side of the base Material).

The maximum total thickness (MT) describes the maximum thickness of all attachments to be fastened plus the base material.

D HEAD STYLES & SIZES



Inspection :
The head marking consists of a RX logo **Engraved.**



Hexagon Head with Washer Face

The integral washer recess is to accommodate a resilient watertight sealing washer. The washer surface provides bearing surface to the drive socket. Available in 1/4", 5/16" and 3/8" socket sizes.



Wafer Head

A versatile head style used for many fastening applications. When used with fixing clips, the low head design eliminates the risks of dimpling the roof when the tradesperson walks on it. Driven with a #2 Phillips Cross Recess Bit.



Countersunk Rib Head

These are used for countersinking into composite material such as chipboard and timber. Driven with a Phillips #2 Cross Recess Bit.

E DRILL POINT SELECTION

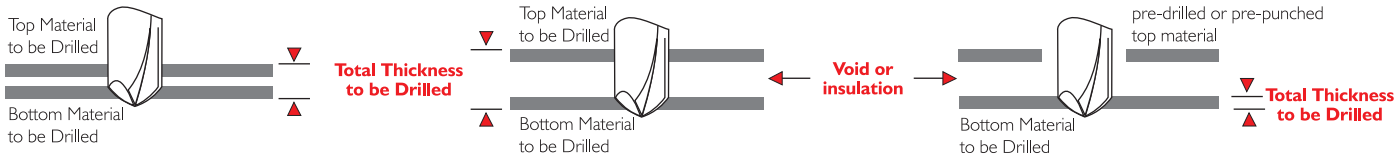

Peak performance thanks to the special drill tip



Day by day we continue to improve on our existing fastener systems and develop new ones. Our focus is on achieving user-friendly solutions on site for improved productivity. Our new self-drilling range works faster and more efficiently, reducing installation times by up to 50%, even in high tensile steels. Optimised design performance enables these fasteners to be installed extremely quickly, with absolute reliability.

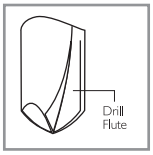

Drill Flute

The length of the drill flute determines the metal thickness that can be drilled. The flute itself provides a channel for chip removal during drilling action. If it becomes completely embedded in material, drill chips will be trapped in the flute and cutting action will cease. This will cause the point to burn up or break.

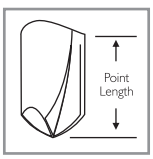

Point Length

The unthreaded section from the point to the first thread should be long enough to assure the drilling action is complete before the first thread engages the drilled metal. Screw threads advance at a rate of up to 10 times faster than the drill flute can remove metal. All drilling therefore should be complete before threads begin to form.



Drilling Through Wood to Metal

If your application calls for drilling through wood over 1/2" thick, a clearance hole is required. Select a fastener with breakaway wings for this type of job. The wings will ream a clearance hole and break-off when they contact metal surface (minimum metal thickness 0.06") to be drilled.

Contemporary Product Launch

We have earned an industry reputation for introducing contemporary international products into the Indian market. We leverage our strong relationship with manufacturers to create India specific and highly innovative products. The companies we import from are ISO certified companies. We focus on value for money pricing.



One Quality Offering

Unlike others, at ROOFIX you won't find us compromising on quality in order to slash prices. Though we are very reasonably priced, our product can stand its own against expensive fasteners. Hence we offer only one quality offering.

Stock Availability

With only a few exceptions, all items in this catalog are considered stock items. As such, they are usually available for shipment within 24 hours. We also have authorized distributors across India.



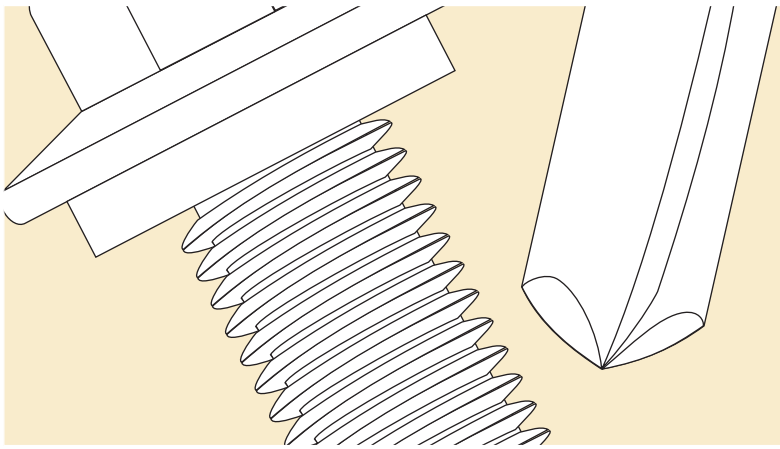

Design and Application Assistance

Our Application specialists can analyze your product design and assist with optimal fastener selection. They can also offer design and material option. Right Product for right application.

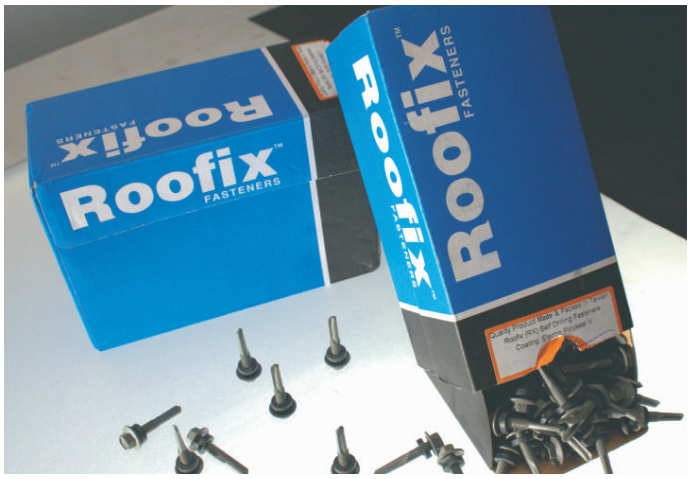

Superior Packaging

We provide delivery worthy packaging. All products are packed in either corrugated boxes or in plastic bags. Smaller packets ensure less loads for the workmen and less wastage on the roof.



After Sales Assistance

Our commitment to you continues during and after construction. If a problem should arise, our technical teams are available to investigate and determine the cause.

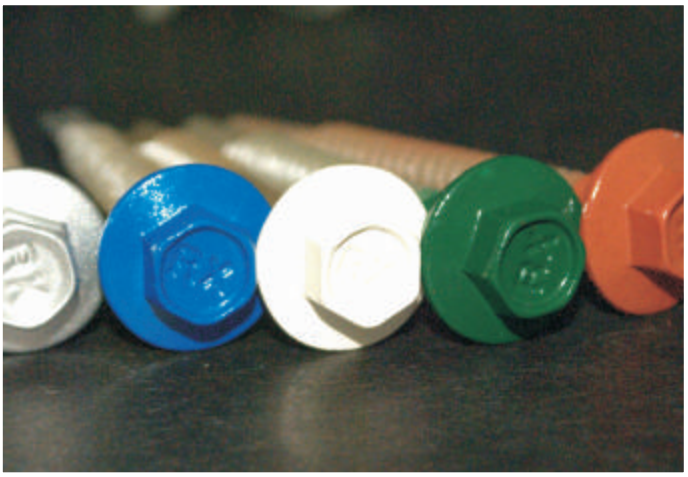

Special Services

Head Painting: Virtually any colour can be matched using highest quality paint available to maximize adhesion and minimize chipping.

New Product Development

Our close relationship with the construction industry has led to many innovative products customized for specific applications. Our technical team can work directly with you to find solutions for your particular need.



Fasteners are small components used in construction. Their overall costs in the building are also negligible, but it can lead to considerable losses momentarily or otherwise, if proper care isn't taken at the time of selection. The nation on an average loses approx. Rs. 360 Crore as a result of corrosion and other related problems.

Let's take the Top to Bottom Route

Owner

Owner is the person who is going to use the building / construction. It is his duty that the project is executed in time, cost and manner in which it is required for the end use of the building. It is for the owner to see that the quality of the product is not over engineered to be neither costly nor inferior that it would need replacement in short span of 2-4 years. IT is important that owner extracts accountability and not leave it to architect, contractors and labour. Along with delegation of jobs, knowledge of job is a good idea for the long run.

Architect

As Said "Building Speaks" Architects put their mind and soul in creating the Construction. The Architect job extends way beyond aesthetics. Longevity of the structure means selection of right material, right pricing, requires lot of study and knowledge. Architect ensures that the product is value fit for the money spent by the owner. Architect also regularly monitors that the contractor uses correct product as per the requirement of the project. Due to inferior quality of product used could lead to loss of reputation for all involved in the project.



Contractor

Contractor has to guide the labourer throughout the job. He should be aware of the brand of construction products, temporary or permanent roofing and should buy products as specified by the architects. Contractor must also ensure that the tools and tackles such as screws driver, nibblers, metal cutting instruments, line makers, measuring tapes, and other equipments, must be adequately provided. Proper tools assist to deliver a a good job. Proper safety equipment to labour is to be provided & used on site.

Labour

International roofing companies and standard specification mandates 4 Screws per square meter. In India, on account of Ignorance or greed normally it is observed that in a single sheet length of 4 to 8 meters, only 4-8 Screws are used. This leads to wobbling, rattling of sheets, roof flying off due to wind pressure, leakages, etc. We must ensure that the right amount of fasteners per Sq. Meter is used. This will ensure Longevity and proper installation.

PRODUCT WARRANTY

Roofix Fasteners offer quality and performance with our range of Self Drilling Screws. The Rust Shield 3 Coating that is standard on all our 'RX' marked Self Drilling Screws, is a protective coating and is meant to sustain well in a variety of climatic conditions. It's this confidence in our commitment that we do not foresee any defective screw related problems. In the unlikely event that this may occur, Roofix Fasteners undertakes to replace any such defective screws at no cost, subject to adherence to terms and conditions:

APPROX LIFE IN YEARS		ENVIRONMENT CHARACTERISTICS
Not Recommended		**VERY SEVERE MARINE (ISO Category 5)** Includes off-shore area and up to 100 m from high waterline area with breaking surf.
Not Recommended		**SEVERE MARINE (ISO Category 4)** Generally includes areas from beach front to 300 m Inland, but may extend further with prevailing winds. Strong salt smell, Haze, salt smearing and salt build up in unwashed areas of structures are some of its characteristics.
6		**MODERATE MARINE (ISO Category 3)** Generally between 300 m and 1000 m from marine surf, although strong prevailing winds may extend this distance. Airborne salt can be present but not visible as haze.
Not Recommended		**VERY SEVERE INDUSTRIAL (ISO Category 5)** Characterised by heavy fall-out and emissions from stacks, and strong sulphur and acid smells. Generally very high rate of corrosion in most building structures is evident.
Not Recommended		**SEVERE INDUSTRIAL (ISO Category 4)** Area around major industrial complexes characterized by heavy fall-out, strong sulphur and acid smells. Also includes buildings with high humidity or corrosions from operations within.
15	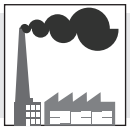	**INDUSTRIAL (ISO Category 3)** Characterised from fall-out from adjoining severe industrial environment or where small industries are congregated in large clusters.
25		**LIGHT INDUSTRIAL / URBAN (ISO Category 2-3)** Areas with light industrial pollution and includes most inland cities. Away from environments, especially mentioned below, and between 500 m and 1000 m from heavy industrial fallout.
30		**MILD URBAN / RURAL (ISO Category 1-2)** Approx distance from marine influences: 0 -2 km.

TERMS AND CONDITIONS

1. This certificate does not apply to product failure due to improper design or screw selection, improper installation practice, in accordance with published installation practices, or when the environment or chosen location would hasten the degradation of the fastener.
2. Any alleged defects must be reported in writing after its inspection by only **Roofix** or its authorised inspectors.
3. Warranty shall not be applicable in the following circumstances:
   - The system being damaged by natural disasters
   - Damage due to acts of negligence, accidents or misuse, including but not limited to vandalism, civil disobedience or acts of war.
4. The screws must be used with compatible roofing and substrate material.
5. The warranty hereby states that the liability of **Roofix** shall only be limited to the replacement of defective screws. All such replacement and installation are to carried out by **Roofix** approved agent or installer.
6. It's hereby made clear that no representatives of **Roofix** has the authority to make any representations or promises except as stated here.
7. This warranty is non-transferrable from the original owner.

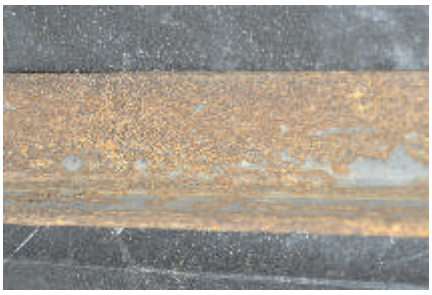

India is geographically surrounded by 7000 Km coastline. India, as a nation is also investing heavily into industries and construction most of which involves metal usage in humongous amounts. Thus corrosion and its various fallouts will continue to a source of worry for India. Unless, strategies and measures are taken to ward off or ensure its prevention. But first, a small background brief on this culprit known as: corrosion. In the presence of air, water or salt, non-precious metals like steel, zinc, aluminum and copper undergo a process called Oxidation (rusting) which slowly disfigures the metals and eventually makes them unsafe and useless. Humidity and air pollution also contributes considerably in hastening the corrosion process.

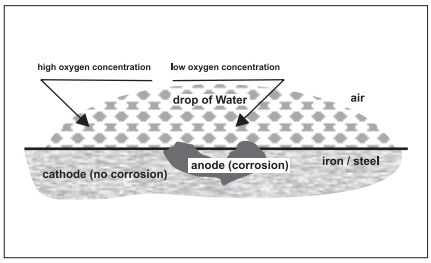

Generalized corrosion (Oxygen type)

Uniform Surface Loss is resulted on plain and low alloy steel containing lower than 13% of Chromium due to neutral water and in humid atmospheres.

The water layer permits electrolytic reactions to develop on the steel surface, leading to progressive corrosion. The rate of corrosion rapidly increases in presence of other pollutants and raised humidity levels.

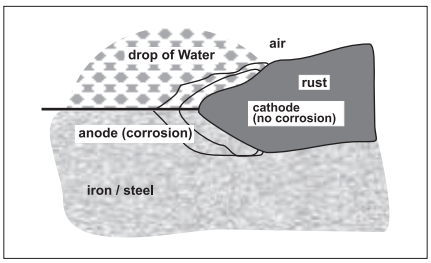

Galvanic corrosion (hydrogen type)

Where two different metals of equal surface area are in contact in the presence of an electrolyte (moisture), an electrical current is formed and the less noble metal migrates and dissolves into the solution. Galvanic corrosion is also used for corrosion prevention where a less noble metal (anode) i.e. zinc, is used to protect the cathode, carbon steel. However, where the coating is damaged its protective effect diminishes. Surface coatings on carbon steel fasteners are inevitably damaged during installation.

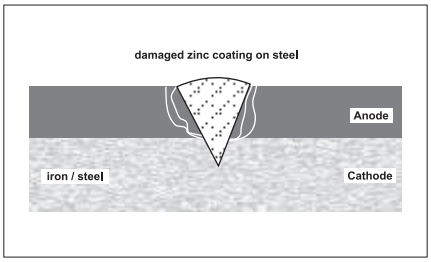

Biochemical corrosion

Metals are dissolved in acids and caustic solutions of different strengths - this is called chemical corrosion, which develops because metals tend to combine with oxygen to form oxides. This tendency is all the stronger the less noble the metal. The acids that attack fasteners often come from the atmosphere e.g. sulphuric acid, resulting from sulphur dioxide emissions from burning fossil fuels, is found in urban and industrial environments; nitric oxides, chlorine, hydrogen chloride, formic acid, acetic acid etc., are found in the vicinity of corresponding industrial plants; chloride and sodium chloride in particular, are common atmospheric pollutants in coastal regions

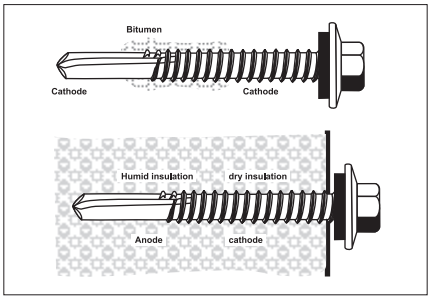

Aeration cell corrosion

An oxygen deficiency can develop in damp thermal insulation, in laps of sheets where moisture is trapped and in other situations where moisture is trapped and pollutants can gather. The area of restricted oxygen supply becomes the anode and corrosion will result, even in non-polluted areas of high pH value. A lower pH value i.e. where other pollutants are present, will increase the corrosion rate.

Cost of Corrosion

Corrosion significantly affects fastener performance and affects the structural integrity of a construction. Premature deterioration or failure results in need for greater maintenance, repair and replacement of damaged equipment. Other sources of costs come from lost production and increased downtime of equipment arising from corrosion problems. Talking of figures; the cost of corrosion in India has been estimated to be 3% of its GDP. It is estimated that the roofing industry in particular undergoes a loss of approx. Rs. 360 Crore annually.



High performance anti-corrosion coating

Rust Shield™ Coating is an epoxy based organic polymer coating applied over electro-zinc plating. It is applied in an electrocoating process. Electrocoating provides complete coverage of all exposed surfaces and excellent film thickness uniformity. This water borne coating eliminates the Phillips recess fill problems associated with the traditional dip spinning process. The electro-zinc base plating acts as a "Sacrificial" element, whereby in an electrochemical reaction, the zinc corrodes, and the base metal remains protected.

Cathodic epoxy electrocoating has been widely used in the automotive industry for many years. ROOFIX™ Fasteners adapted this process to coating fasteners and it is now the benchmark for corrosion resistance in the construction fastener industry.

Extra Protection = Extra Performance

ROOFIX™ fasteners are ideal for exterior and interior applications where protection against chipping, moisture and salt spray corrosion is needed.

RoHS COMPLIANT (chrome-free)

Rust Shield™ Coating system is fully ROHS compliant. This means that it does not contain hexavalent chrome or any of the listed items under the ROHS requirements. In fact, it does not contain any chrome at all, it is chrome free. This is a big advantage for meeting the environmental requirements.

Precise coating thickness control results in no recess head fill or thread fill.

A brief look at the processes in a Rust Shield coating

Salt Spray	:	1000 hours as per ASTM B117-03
Kesternich	:	15 cycle asper ASTM G-87
Humidity	:	1000 Hours as per ASTM D2247
UV with Humidity	:	2000 Hours as per ASTM G154
Base Coat	:	Zinc plate or zinc-nickel plate
Coating thickness	:	20-25 microns
Corrosion Resistance	:	Excellent
Torque Characteristics	:	Excellent
Application	:	Electroplate + Electrocoat
Thickness	:	Uniform

A STEP-BY-STEP GUIDE IN ANTI-CORROSION PROCESS



CORROSION PROTECTION COATING SYSTEM

Heat Treatment

Controlled heat treatment process releases hydrogen preventing embrittlement. Also well controlled hardness on both surface and core of fasteners prevents all metallurgical defects.

Mechanical Sacrificial Coat

A proven tin/zinc alloy with a minimum ratio of 20-30% tin and balanced zinc and porosity not less than 8 with minimum 25um (*micron*) thickness that conforms to AS3566 Class 3 requirements.

Polymer Barrier Coat

15 microns of Barrier layer of Epoxy Polymer Resin, forms a high performance barrier against oxidation, heat, chemical and scratches.

QUALITY

All screws of **ROOFIX™** undergo a series of rigorous tests thus ensuring they not just meet the lab standards but also exceed American Standards (ASTM) & Australian Standards (AS 3566 – 2002 part 2)

Some of the additional tests that our products under go are : material core hardness, porosity, coating thickness, salt-spray and sulfur dioxide kesternich test.

ELECTRO-GALVANIC CORROSION PROTECTION



Non conductive EPDM seal to prevent electro-galvanic corrosion that causes corrosion on colored metal roofing sheet.



ROOFIX™ Self Drilling Fasteners are hardened drill point that will drill and thread in structural steel and mild steel. These drill points are designed in manner much the same as high speed steel drill bits.

To choose the right fastener, it is necessary to select one where the length of the drill point is equal to or greater than the total thickness of the material to be drilled including the air-gap. If the drill point is less than the total thickness of the material and the thread engages, then the fastener can break or become impossible to drive.

Methodology to use :

1. Measure the total thickness of the material to be drilled.
2. Choose a Screws that has a drilling capacity equal to or greater than the total thickness of material to be drilled.
   a. Cold Rolled Range — Drills upto 4.5mm thickness
   b. Hot Rolled Range — Drills from 4.5mm To 12mm Thickness
3. Select the Correct Driver for the screws being used.

	Head Style	Driver
a.	Hex head 10 / 12G	5/16" Hex Socket
b.	Wafer Head 12G	#3 Philips bit
c.	CSK Head 6/8/10G	#2 Philips bit

4. Socket to be fitted to Screws gun having a speed under 3000 rpm.
5. Place the screws on the socket and place at the fastening position.
6. Press screwgun switch and maintain firm end pressure until fastener is drilled and fastened.
7. **With good quality screws proper tools & tackles are required to fix the self drilling fasteners.**
   We recommend screw driver drill machine having 2500 rpm should be used.



Questions we ask to provide right solutions

- **To Establish the correct drill point.**
  - What type of metal materials will the screw have to drill through and finally fix to?
  - Or will the screw fix to timber?
- **To establish the correct length screw**
  What is the total thickness build up of all components that the screws will drill through? Including the sheet and purlin thickness, insulation thickness when compressed and any packing or spacers in the system.
- **Will a washer be required?**
  All the screws offered with Roofix Self Drilling Screws are fitted with Cut Washers. The metal bonded washers of 16mm and 19mm are available extra as required.
- **Will the screw require a painted finish**
  If so, please provide what color details.
- **Quantity required ?**
  For Quotation and availability purpose.
- **Lead time.**
  How soon will they be required?



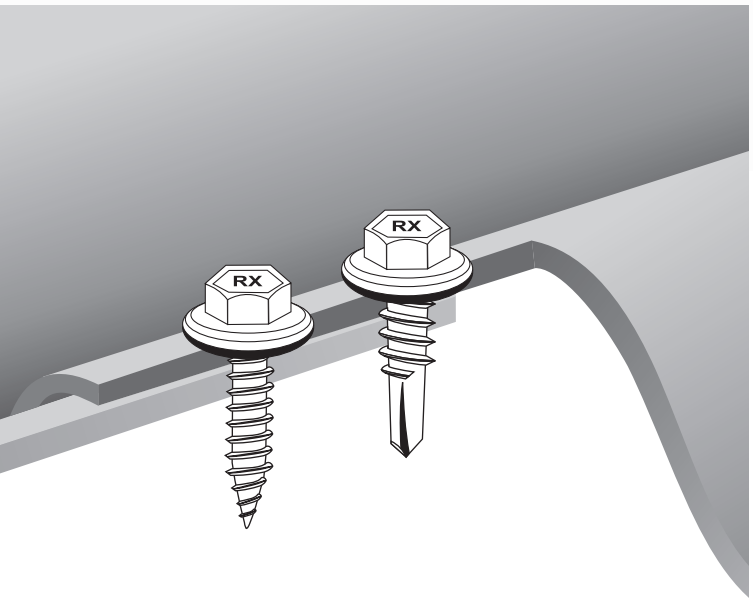

Applications

For Over lapping of two metal roofing sheets to each other.

Material

Case Hardened Carbon Steel RustShield Coating AISI 1022

Sealing Washer

EPDM Washer.

Plating

Rust Shield™ Coating is a unique co-polymer coating that provides greater resistance than Zinc or Cadmium plating. Tested in accordance to ASTM B117 & AS 3566.

Head

Hex Washer Head

Accessories

Power Screwgun With speed under 3000 rpm.

EZI Find	Description (G x TPI x L)			Point Type	Drills Thickness (mm)	NET Weight (KG/1000) approx	Box Packing	Carton Qty.
STITCHING SCREW	**Hex Washer Head**							
105.	10G - 16TPI x 20mm	with Washer	Sharp Point	Sharp Point	1.2 mm	2.80	1000	8000
106.	12G - 16TPI x 20mm	with Washer	Sharp Point	Sharp Point	1.2 mm	3.90	500	4000
107.	10G - 16TPI x 16mm	with Washer	Drill Point	#2	2 mm	3.20	1000	8000





EZI Find		Description (G x TPI x L)		Point Type	Drills Thickness (mm)	NET Weight (KG/1000) approx	Box Packing	Carton Qty.
	STITCHING SCREW	**Hex Washer Head**						
205.	12G - 14TPI x 25mm	with Washer	----	#3	4.5 mm	5.60	500	4000
206.	12G - 14TPI x 30mm	with Washer	----	#4	4.5 mm	5.70	250	3000
207.	12G - 14TPI x 40mm	with Washer	----	#4	7.5 mm	7.00	250	3000
208.	12G - 14TPI x 45mm	with Washer	Fully Threaded	#4	7.5 mm	7.60	250	2000
209.	12G - 14TPI x 55mm	with Washer	DT Threaded	#3	4.5 mm	9.70	250	2000
210.	12G - 14TPI x 58mm	with Washer	Fully Threaded	#4	7.5 mm	9.40	200	1600
211.	12G - 14TPI x 60mm	with Washer	Fully Threaded	#4	7.5 mm	9.55	200	1600
212.	12G - 14TPI x 80mm	with Washer	DT Threaded	#3	4.5 mm	12.50	150	1200

Common screws sizes are mentioned above. For other sizes please contact us.

ROOFIX™ Carbon Steel Screws are designed for Fastening metal sheet to light to heavy section steel framing with or without intermediate insulation layers.

Roofix™ FASTENERS

WALLING & CLADDING FASTENERS

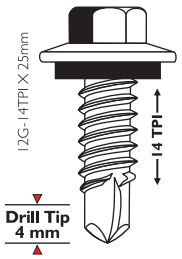

Applications

For Fastening of vertical metal roofing sheets to structural steel / secondary Substrate is said to be Wall / Cladding / Valley Fixing. The Fixing is done on Valley between two tops on the Roofing Sheet. Structural Steels could be a **Cold Rolled Steel** (i.e. Z / C Purlins, Square Pipes with thickness not more than 4mm)

Plating

Rust Shield™ Coating is a unique co-polymer coating that provides greater resistance than Zinc or Cadmium plating. Tested in accordance to ASTM B117 & AS 3566.

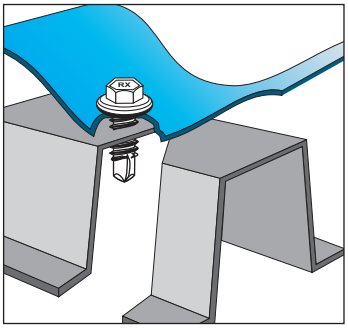

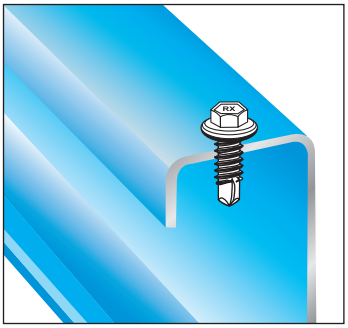

ROOFING & CREST FASTENERS

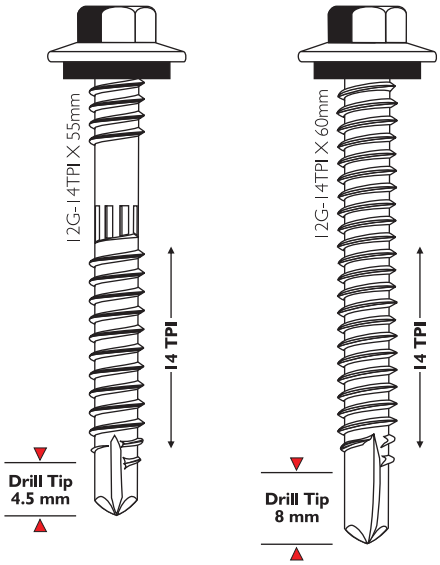

Applications

For Fixing of horizontal / top metal roofing sheets to structural steel / secondary substrate is said to be Roofing / Crest Fixing. The fixing is done on the Crest / Top of the metal sheet. Secondary substrate could be a **Cold Rolled Steel** (i.e. Z / C Purlins / Square Pipes with thickness not more than 4mm)

Plating

Rust Shield™ Coating is a unique co-polymer coating that provides greater resistance than Zinc or Cadmium plating. Tested in accordance to ASTM B117 & AS 3566.

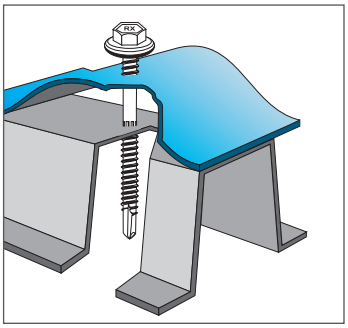

SPECIFICATION

Material

Case Hardened Carbon Steel RustShield Coating AISI 1022

Head

Hex Washer Head 8mm

Sealing Washer

EPDM Washer.

Accessories

Power Screwgun With speed under 3000 rpm.

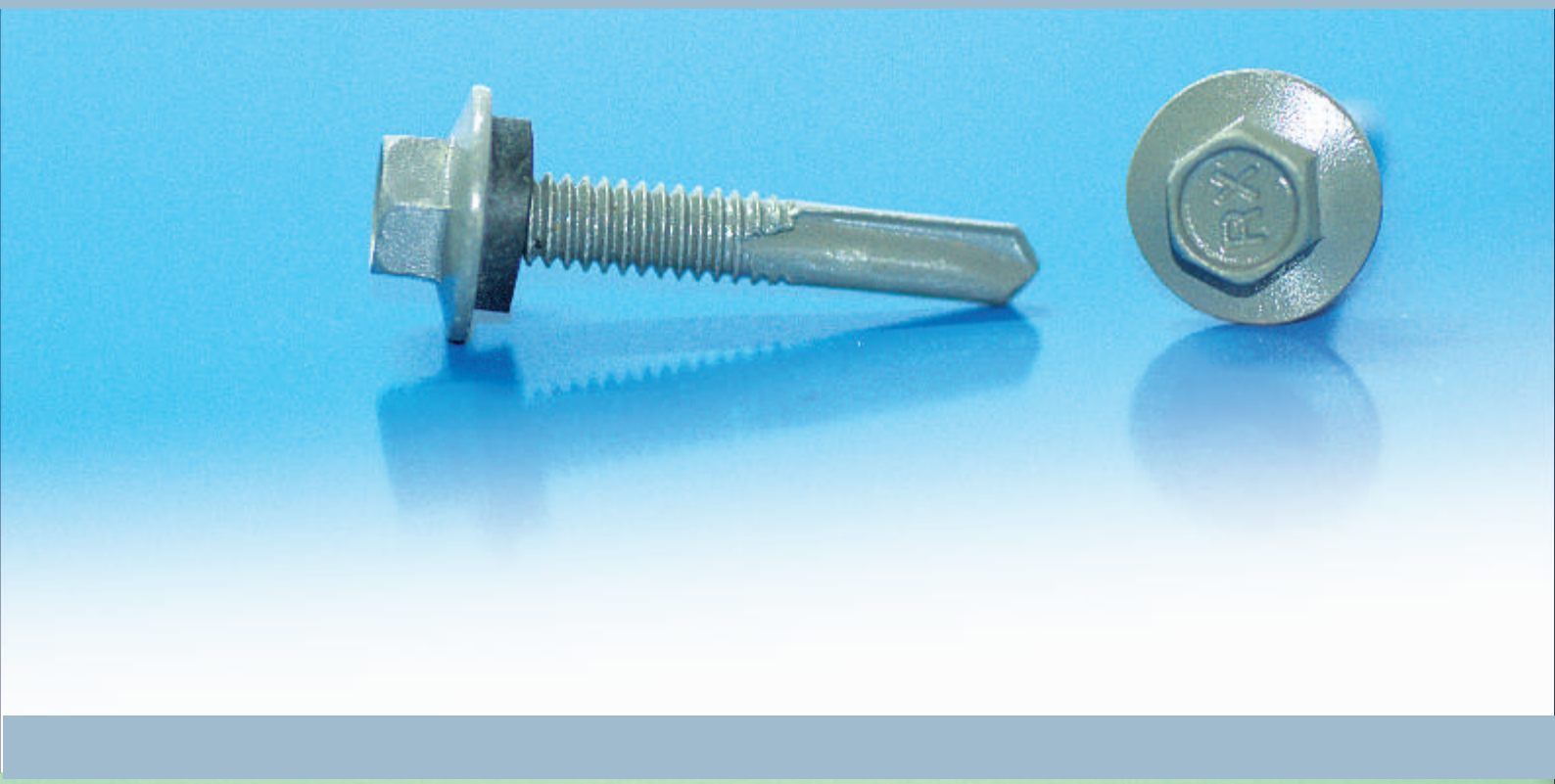

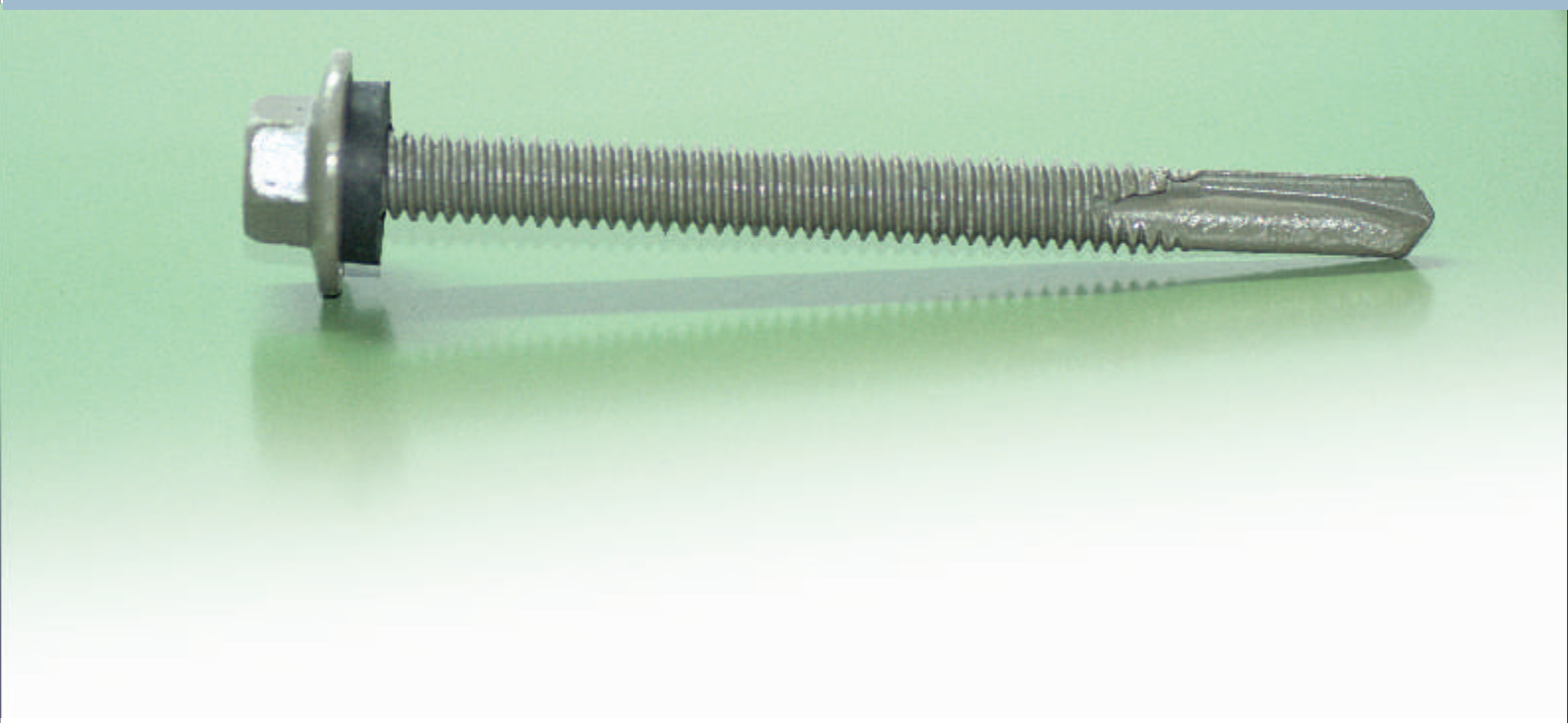

EZI Find	Description (G x TPI x L)			Point Type	Drills Thickness (mm)	NET Weight (KG/1000) approx	Box Packing	Carton Qty.
STITCHING SCREW	**Hex Washer Head**							
250.	12G - 24TPI x 32mm	with Washer	----	#5	12 mm	6.40	250	3000
251.	12G - 24TPI x 65mm	with Washer	----	#5	12 mm	11.00	200	1600
252.	12G - 24TPI x 80mm	with Washer	----	#5	12 mm	12.70	150	1200

Common screws sizes are mentioned above. For other sizes please contact us.

ROOFIX™ Carbon Steel Screws are designed for fastening metal sheet to heavy section steel framing upto thickness of 12mm Steel with or without intermediate insulation layers.

Roofix™ FASTENERS

WALLING & CLADDING FASTENERS

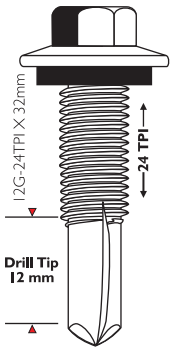

Applications

For Fastening of vertical metal roofing sheets to structural steel / secondary substrate is said to be Wall-Cladding / Valley Fixing. The Fixing is done on Valley between two tops on the Roofing Sheet. Structural Steels could be a Hot rolled Steel (i.e. I Beams / Angles / Channels with thickness varies from 4.5mm to 12mm)

Plating

Rust Shield™ Coating is a unique co-polymer coating that provides greater resistance than Zinc or Cadmium plating.

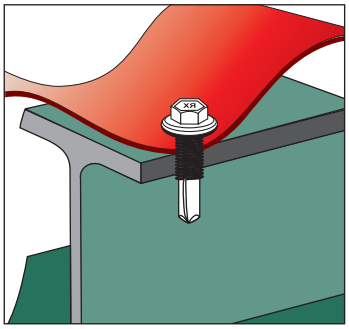

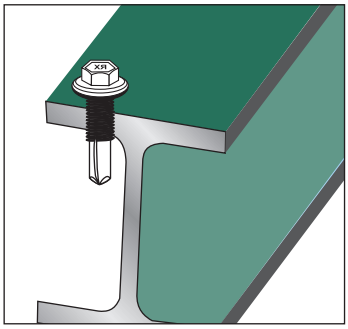

ROOFING / CREST FASTENERS

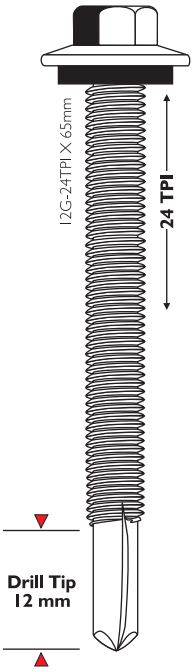

Applications

For Fixing of horizontal / top metal roofing sheets to structural steel / secondary substrate is said to be Roofing. The fixing is done on the Crest / Top of the metal sheet. Secondary substrate could be a Hot rolled Steel (i.e. I Beams / Angles / Channels with thickness varies from 4.5mm to 12mm).

Plating

Rust Shield™ Coating is a unique co-polymer coating that provides greater resistance than Zinc or Cadmium plating. Tested in accordance to ASTM B117 & AS 3566.

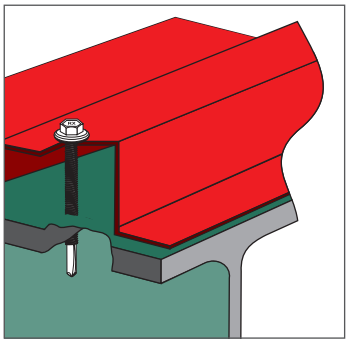

SPECIFICATION

Material

Case Hardened Carbon Steel RustShield Coating AISI 1022.

Head

Hex Washer Head 8mm

Sealing Washer

EPDM Cut Washer.

Accessories

Power Screwgun With speed under 3000 rpm.

CONCRETE FASTENERS



Applications

Self Drilling fastening to fix directly into pre drilled holes in concrete and brick, as well as pre-cast panels, lightweight cement blocks, without inserts or chemicals.

Material

Case Hardened Carbon Steel **Rust Shield™** Coating AISI 1022

Plating

Blue **Rust Shield™** Coating is a unique co-polymer coating that provides greater resistance than Zinc or Cadmium plating.

Accessories

Power Screwgun with speed under 3000 rpm.

WOOD FASTENERS



Applications

Self Drilling screws for fastening Metal Sheets to wood .

Material

Case Hardened Carbon Steel **Rust Shield™** Coating AISI

Sealing Washer

EPDM Washer

Plating

Rust Shield™ Coating is a unique co-polymer coating that provides greater resistance than Zinc or Cadmium plating. Tested in accordance to ASTM B117 &

Head

Hex Washer Head 8mm

Accessories

Power Screwgun With speed under 3000 rpm.

For available sizes and details please contact us.

FIBRE CEMENT FASTENERS



FASTENING
FIBRE CEMENT SHEET
TO STEEL STRUCTURE

Applications

For Direct Fastening of fibre cement sheet to steel.

Material

Case Hardened Carbon Steel **Rust Shield™** Coating AISI

Sealing Washer

EPDM Dome Washer

Plating

Rust Shield™ Coating is a unique co-polymer coating that provides greater resistance than Zinc or Cadmium plating. Tested in accordance to ASTM B117 & AS 3566.

Head

Hex Washer Head 8mm With Special Wings.

Accessories

Power Screwgun With speed under 3000 rpm.

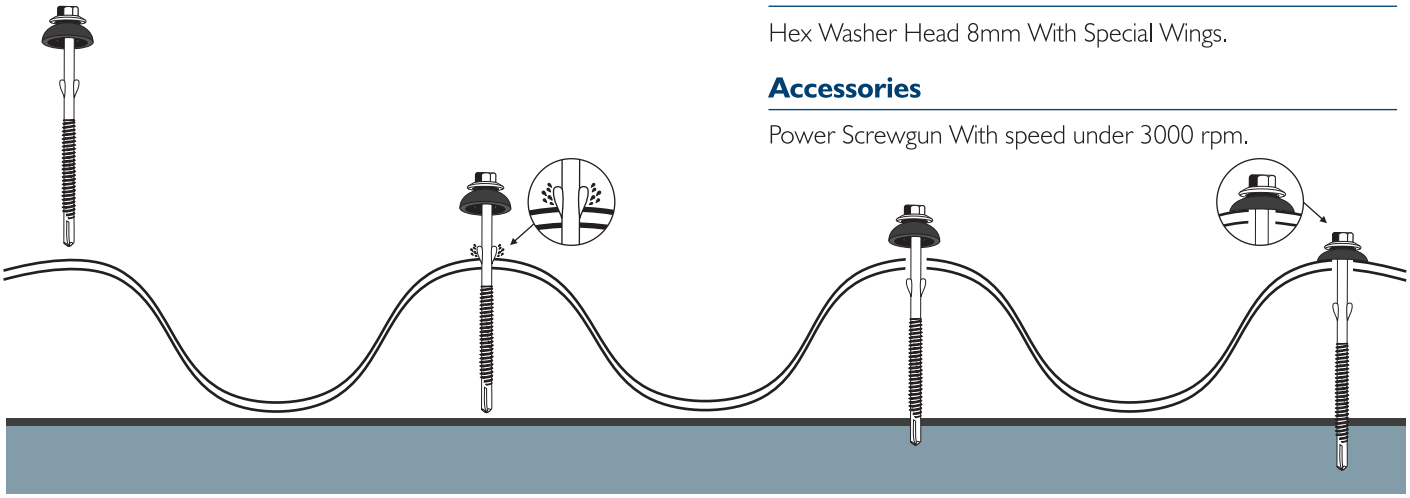

EZI Find	Description (G x TPI x L)			Point Type	Drills Thickness (mm)	Box Packing	Carton Qty.
STITCHING SCREW		**Hex Washer Head**					
301.	14G - 14TPI x 90mm	with Washer	----	#5	10 mm	50	400
302.	14G - 14TPI x 100mm	with Washer	----	#5	10 mm	50	400
303.	14G - 14TPI x 110mm	with Washer	----	#5	10 mm	50	400

Common screws sizes are mentioned above. For other sizes please contact us.

CSK WAFER HEAD FASTENERS



Applications

For Direct Fastening of Different boards to steel.

Material

Case Hardened Carbon Steel **Rust Shield™** Coating AISI

Plating

Rust Shield™ Coating is a unique co-polymer coating that provides greater resistance than Zinc or Cadmium plating. Tested in accordance to ASTM B117 & AS 3566.

Accessories

Power Screwgun With speed under 3000 rpm.

Fastening for fixing Fibre Cement, Calcium Silicate, Gypsum & Bison Boards

STAINLESS STEEL FASTENERS



Applications

For fixing of Metal sheet including Aluminium.

Material

Stainless Steel

Sealing Washer

EPDM Dome Washer

Head

Hex Washer Head.

Screws for Light Weight Structures,
CSK Head Wing Screws, Wafer Head, Stainless Steel Self Drilling Screws
For sizes and details please contact us.

WAFER HEAD FASTENERS



Applications

For Fixing of Clips to the secondary substrate. The Clips hold the roofs.

Material

Case Hardened Carbon Steel **Rust Shield™** Coating AISI

Plating

Rust Shield™ Coating is a unique co-polymer coating that provides greater resistance than Zinc or Cadmium plating.
Also available in Zinc plated fasteners.

Head

Wafer Head

Accessories

Power Screwgun With speed under 3000 rpm.

CARBON STEEL COMPOSITE PANEL FASTENERS



Applications

For Direct Fastening of fibre cement sheet to steel.

Material

Case Hardened Carbon Steel **Rust Shield™** Coating AISI

Sealing Washer

EPDM Dome Washer

Plating

Rust Shield™ Coating is a unique co-polymer coating that provides greater resistance than Zinc or Cadmium plating.
Tested in accordance to ASTM B117 & AS 3566.

Head

Hex Washer Head

Accessories

Power Screwgun with speed under 3000 rpm.

Sizes upto length 180mm are available for details please contact us.

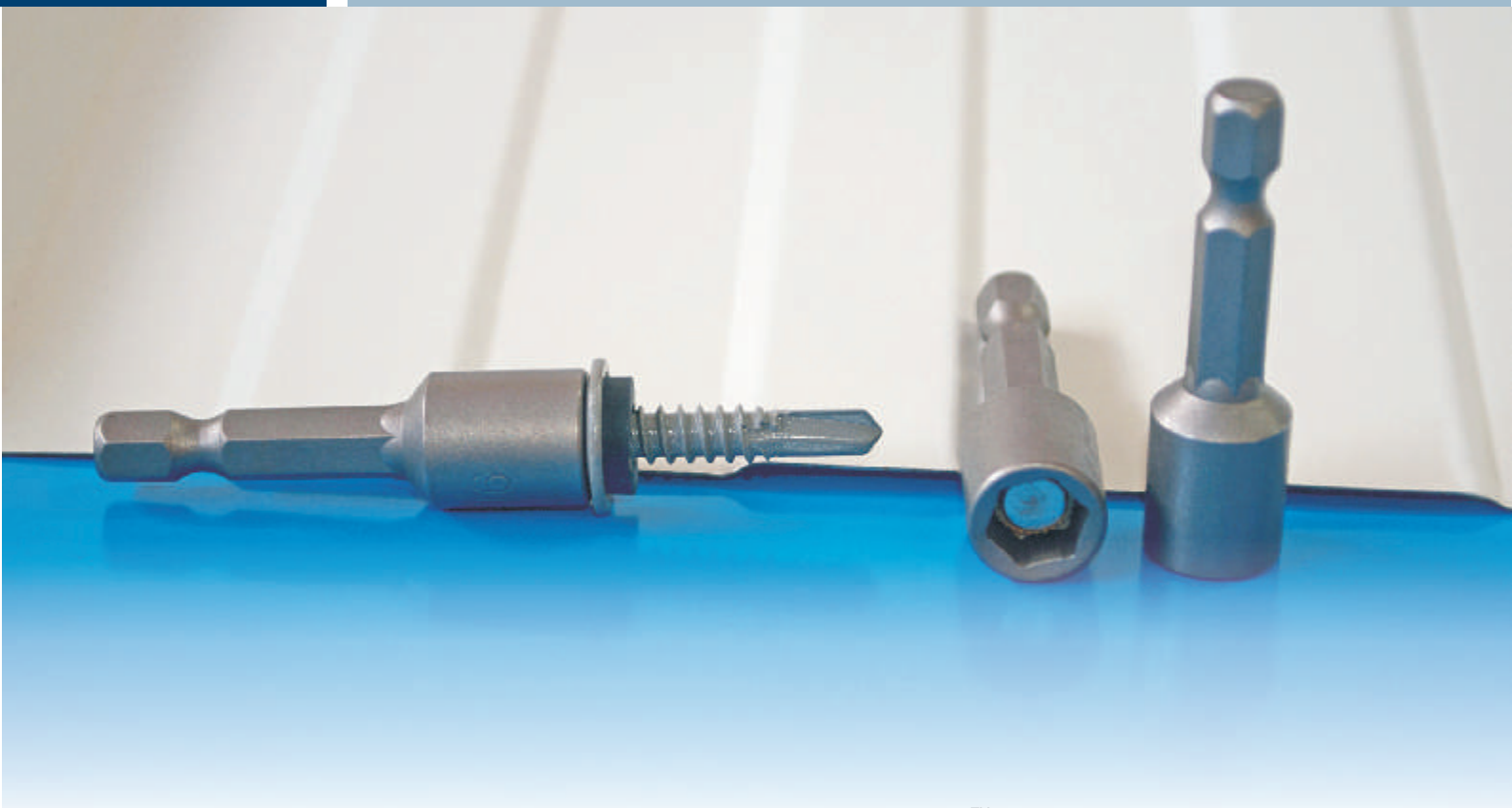

Range of Drive Bits and Sockets for Quality ROOFIX™ Fasteners.

	Size	to suit screws sizes	Box Qty.
Hexagon Sockets			
	5/16 x 45mm	10G & 12G	10 Pcs
	5/16 x 65mm	10G & 12G	10 Pcs.
PHILLIPS DRIVE BITS			
	#2 x 50 / 65		

For Sockets sizes upto 150mm long are stocked. For details please contact us.



	DESCRIPTION	RANGE
	**SEALING WASHERS** Resilient E.P.D.M. washers designed to provide effective weather sealing at exterior fixing points	8 gauge 10 gauge 12 gauge 14 gauge
	**12/14 GAUGE ALUMINIUM BONDED WASHERS** An E.P.D.M. seal bonded to a cone shaped metal washer. Used in assembly with roofing screws for securing ridge capping in cyclonic areas.	16mm x 0.9mm 19mm x 1.2mm 25mm x 1.2mm
	**POLYCARBONAT ROOFING WASHERS** Moulded E.P.D.M. washer for polycarbonate sheeting.	23 / 26mm dome waher
	**CYCLONE ASSEMBLY COMPONENT FOR ROOFING PROFILES.** Steel support washers with E.P.D.M. seals used in assembly with roofing screws for corrugated roofing profiles.	Standard cyclone plate E.P.D.M. to suit plate.
	**CYCLONE ASSEMBLY COMPONENT FOR ROOFING PROFILES.** Steel support washers with E.P.D.M. seals used in assembly with roofing screws for square rib roofing profiles.	Standard cyclone plate E.P.D.M. to suit plate
	**FRP WASHER**	32mm

These washers can be purchased separately or assembled on suitable fasteners of your choice. Product are available Ex. Stock.



"With 4.5 Fasteners per square metre of roofing sheet, washers play a significant role in any roofing project."

WHAT is EPDM? Ethylene Propylene Diene Monomer.

This thermo set membrane is compound from rubber polymer and is often referred to as rubber roofing. The American Society for Testing and material (ASTM) classifies this material as an M Class Polymer. Ethylene and propylene derived from oil and natural gas, are organic building blocks of EPDM. When combined with diene to from the basic rubber matrix, the result is long-chain hydrocarbon with a backbone of saturated molecules and pendant double bonds. The Practical translation is ethylene, propylene and diene combine to form a large molecule that is very stable when exposed to sunlight, heat, ozone (UV) and moisture.

EPDM (Ethylene Propylene Dimonomer) became the seal of choice with the leading roof fastener manufacturers. This terpolymer elastomer is particularly well suited for sealing washers due to its resistance to water, chlorinated water, dilute acids, alkaline, ozone and oxidizing chemicals. It has a negligible absorption rate, is not susceptible to swelling, and can withstand temperatures up to 100°C.

At **REALM** we recommend that consumers ensure that the washer they purchase complies with industry standards and supports the life and integrity of the roofing system.

The right balance of hardness, tear strength and compression performance determines how well a cut washer assembles, compresses and resists the tearing affects of swarf, and keeps the screw sealed throughout its life on the roof.

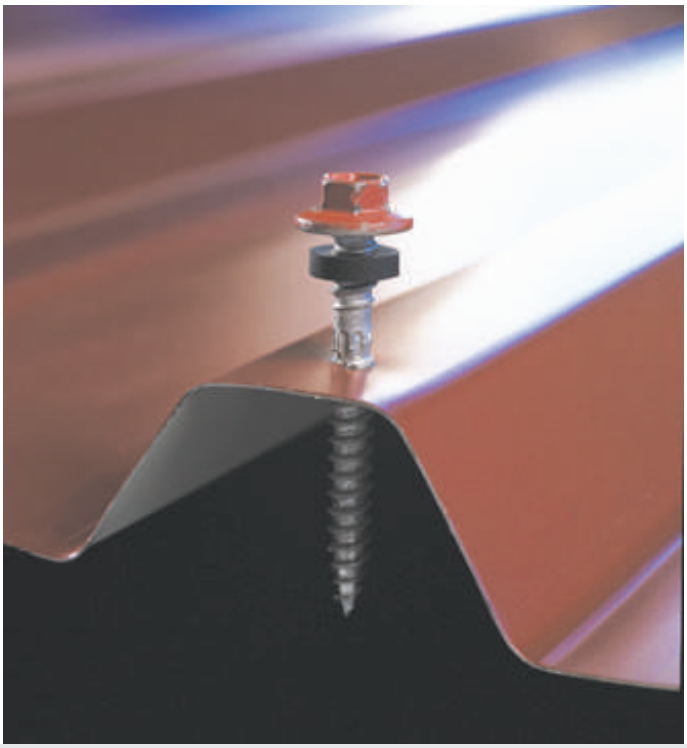

Washer Integrity and Exposure to Heat

Washers from materials other than EPDM will quickly breakdown on the roof as temperatures climb in the heat of the day. Research shows that on a 23°C (73°F) day a metal roof temperature can climb to 85°C (185°F).

BUT AREN'T ALL WASHERS THE SAME?

An Expensive Assumption !

Because washers are small and relatively inexpensive, their importance in a roofing project is sometimes overlooked. However, a poor quality washer can result in enormous costs if it is badly designed or made of inferior material.

The EPDM seal can be inseparably bonded to washers of galvanized carbon steel, aluminum or stainless steel, or loose. Both provide a leak free and long lasting seal.

Leading Consultants recommend the used of EPDM sealing washers with low in carbon black. Adaptability feature allows it to be applied to virtually any roof surface: Flat, Spherical, Curved or slanted.

The range of employment and durability of EPDM elastomeric seals is as follows:

Temperature resistance	-40° to 100° C
Tensile strength	Good
Impact elasticity	Good
Abrasion resistance	Good to Very Good
Residual compression set	Very Good
Flame resistance	Low
Water resistance	Very Good
Acid resistance	Good to Very good
Alkali resistance	Very Good
Ozone resistance	Good to Very good
Weathering resistance	Very Good
Contact stains	None
Migration stains	None
Animal and vegetable oils	Very Good
Ageing in sunlight	Very Good
Ageing in heat	Very Good
Ultraviolet resistance	Very Good

"It is important to realise that high heat affects tear strength."

SEALING CRITERIA

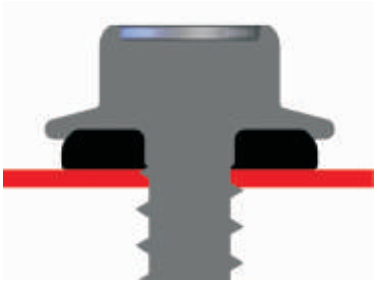

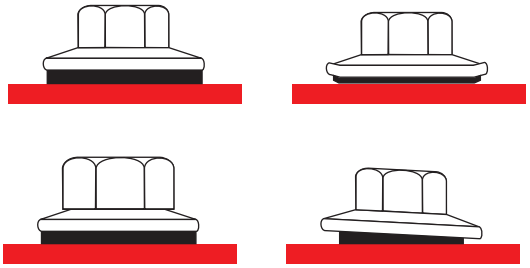

DRIVE FASTENER TO CORRECT DEPTH
- Provide visible marker of over-driving
- Reduce likelihood of stripping

SEAL THE SCREW
- Around shank & head
- Against roof material

METAL ON METAL ABRASION
- Provide cushion between metal surfaces

THERMAL CYCLIC LOADING
- Ease of movement for thermal expansion & contraction

The Roofix screws offer weatherproof fastenings where moisture or condensation is a factor. The integrated washer/head design seals the hole to prevent moisture from dripping into the fastener threads, reducing corrosive build-up. As added protection against corrosion, all Roofix screws come standard with Rustshield coating. The torque control and adjustment of the Electric screwdrivers help ensure that the optimal seal is applied.

CUT WASHERS

CHECK THE BENEFITS !

- **Only EPDM - No Neoprene**
  Superior quality EPDM for reliable external performance
- **UV and Ozone Resistance**
  Formulated for maximum life span in harsh environments
- **Non-conductive**
  To guard against bi-metallic corrosion



FLUTED

METAL BONDED WASHERS

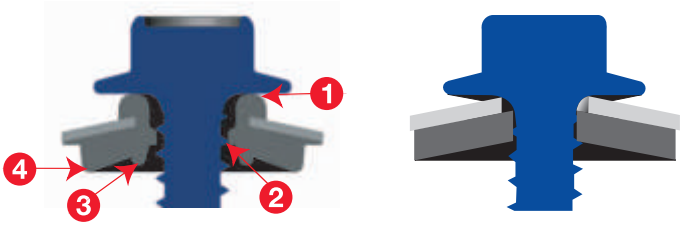

Four Sealing Points for Extra Protection
Each washer is designed to seal in 4 locations. This seals both the roof and the fastener in a way that other flat-punched washers cannot achieve.

Description	Fastener Gauge	Diameter (mm)	Colour
A16-12/14	12/14	16	Black
A19-12/14	12/14	19	Black
A25-12/14	12/14	25	Black

POLYCARBONATE WASHERS



Products from DEKS Australia

Typical Applications Include

Description	To suit Fastener	Dia.xThickness (mm)	Colour
POLYCARB for use on polycarbonate roofing			
22mm	10/12#	22 x 8	Grey
25mm	12#	25 x 9	Grey
DEKSEAL for use with a pressed metal washer on type roofing (Cyclonic Purpose)			
Big	12#	35 x 5	Black
Small	12#	29 x 6	Black/Grey

Fasteners are critical components of buildings, **Your reputation hangs on specifying the right fasteners.**

Cost of the Fasteners is normally

***less than* 2 % of the total Building cost or**

***less than* ½ % of the total cost the project.**

But specifying inadequate fasteners can cause up to 100% of defect in Project. It would lead to replacement of roofs, Obstacle of production, water leakage, mess up of finished products, machinery, and all related issues.

Standard types and grades of fasteners are sufficient in many construction applications. In these instances, fastener selection can usually be based upon industry standards, building code requirements, and design loads. It may even be acceptable in some cases to leave fastener selection to the discretion of contractors or building product fabricators, allowing them to select fasteners based on cost, convenience, and trade practices.

At other times, however, fastener selection can be one of the most crucial aspects of building design. Professional judgment is required to specify fasteners that:

- Perform as intended,
- Are dependable and economical, and
- Fasteners have to last equal to or more than the life span of the building





Factors effecting fastener performance include:

- Structural capacity and safety factor.
- Static and dynamic load resistance.
- Pull-out and pull-over resistance.
- Shear resistance of fastener and attached materials.
- Corrosion resistance in conditions of use.
- Is a long term seal guaranteed?
- Seal against liquid or gas leakage (if required).
- Constructability, practicality, and inspect ability.
- Compatibility with design intent and aesthetics.
- Removability, or other special requirements.
- Service life exceeds that of attached materials.

Specifying fasteners is part of designing safe, durable, and practical connections between building components. Architects / Engineers must specify fasteners that fulfill design intent and provide safe and durable connections.

Peace of mind, and knowing you have the right suggested protection and coating on your fasteners is high priority for us here at **REALM** and more importantly for you, our valued customers.

MECHANICAL PROPERTIES OF STEEL

Gauge	Thread per Inch	Min Axial force for withdrawal kN	Min torque for torsional strength Nm
10	16 24	2.5	6.9 7.3
12	14 24	2.8	10.9 11.3
14	10 20	3.1	14.1 17.6

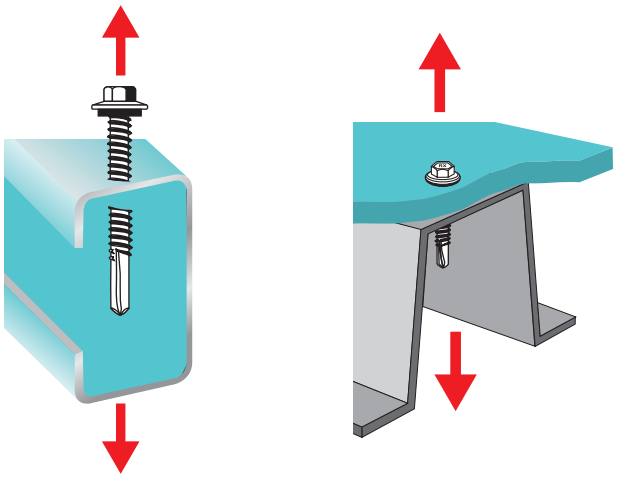

Average Pullout Loads (Kilo Newtons kN)
The load required to pull the fastener out of the material it is screwed into.

ULTIMATE AVERAGE FASTENERS PULLOUT VALUES (POUNDS -LBS)

Description	Point	Standard Sheet Metal Thickness							
	mm	26 Ga 0.4572	24 Ga 0.6096	22 Ga 0.762	20 Ga 0.9652	18 Ga 1.2192	16 Ga 1.524	14 Ga 1.905	12 Ga 2.6924
8-18	2	120	197	268	301	494	702	961	1615
10-16	2	134	218	281	340	539	741	991	1632
10-24	2	161	238	293	324	517	1096	1544	1906
12-14	3	142	214	296	349	580	767	1078	1553
12-24	5				311	452	1060	1288	1844

(To convert lbs force to Newton multiply values by 4.4482)

Ultimate Strength Values
Carbon Steel Case Hardened Product

Size	TPI	Tensile Lbs. Min	Shear Avg. Lbs. Ult.	Torque Min. In-Lbs.
4.2mm/8G	18	1615	1100	42
4.8mm / 10G	16	2200	1470	61
4.8mm / 10G	24	2362	1535	65
5.5mm / 12G	14	2950	1960	92
5.5mm / 21G	24	3400	2275	100

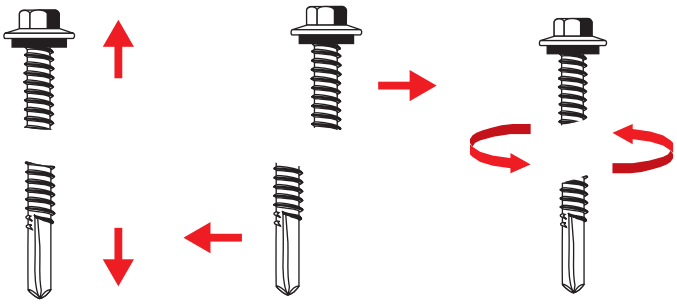

Axial Tensile Strength (kN)
The tensile load required to break the screw

Single Shear Strength (kN)
The shear load required to break the screw

Torsional Strength (kN)
The torque required to break the screw

ROOFIX™ publishes a wide range of technical performance data on its fasteners. Generally the values given are the ultimate values. The engineer would then apply a safety factor appropriate to the regulations/standards.

To determine the actual frequency of fasteners, it is necessary that all loading criteria are made available to include windloads. With this information available, **ROOFIX™** can work in close co-operation with the designer, the system supplier, and the contractor to assist in determining fastener frequencies.

PROBLEM	POSSIBLE REASON	SOLUTIONS
Drill Point would slip off the fastening surface.	Screws are not at the right angle of the surface.	Screwgun must be held @ 90 degree to the surface.
	Not enough force to start drilling action Steel surface is too Hard.	Apply downward force to the tool before start When the tools starts extra force will move ahead the tip and start to drill ahead.
	Power tool running in Reverse	Change to forward position.
Screws swing from side to side and prevent a start	Socket is old, worn or Obstructed.	Replace or Clean Socket. Firm Fit of Screw on Socket is a must.
Screws are drilling will not thread	Surface thickness of material is too thick	Check the thickness of material
	Power tool is has insufficient speed and power.	Reduce the plug point. Use a heavier power tool.
Heads "Break Off" when tightened.	Depth locator not set correctly in screwdriver	Adjust the depth locator, hence will stop at correct depth.
	Torque clutch wrongly set	Reduce torque setting.
Drill point commence to drill have difficulty in Completion of drilling	Steel Section being too hard	Test screws into another piece of steel.
	Material too thick for TIP of Fastener	Select the Correct Fasteners.
Screw thread are stripping in steel.	Steel is too thin	Use Coarse thread product
Drill TIP Breaks	After drilling the thickness of first material, drill TIP may be crashing into second thickness when there is an air gap between	Screws with Longer Drill TIP is recommended.
	Power Tool is in Reverse mode	Change to forward position.
	Too Much Pressure being applied	Release pressure to allow screw do the work
EPDM Washers are squeezed out	Depth Locator not correctly set	Set the power tool correctly.
	Excessive force applied	Use less force
Cross recess tip breaking or not lasting	Torque or depth on screwdriver not set correctly.	right socket, power tool, and torque is required to do the job.
Countersunk Head screw not self Embedding	Wrong screw being used	Choose a correct fastener length
	Cement sheet too	pre drill a hole in the sheet
	hard head or drive damaged	Correct Drive bit of ph #2 is used
	screw embedding too deep	set the power tool to stop correctly.

COMMON FASTENERS PROBLEM

Roofix™ FASTENERS

